REV	DESCRIPTION	ECN#	DWN	APVD	DATE
A	ISSUED ENGINEERING DRAWING	1668	DMP	RJE	01APR10
B	ADDED DASHED LINES TO VAC POWER SUPPLIES	1668	RJT	RJE	21APR10
C	REROUTED VAC POWER SUPPLY LINES	2440	RJT	RJE	03OCT11
D	DIAGRAM RE-WORKED FOR NEW JUNCTION BOX ASSY	2473	JCA	RJE	07SEP12
E	GENERAL UPDATES	3965	NDD	JCA	02FEB15
F	ADDED THERMOSTAT DETAILS	6318	ASC	ASC	05APR22

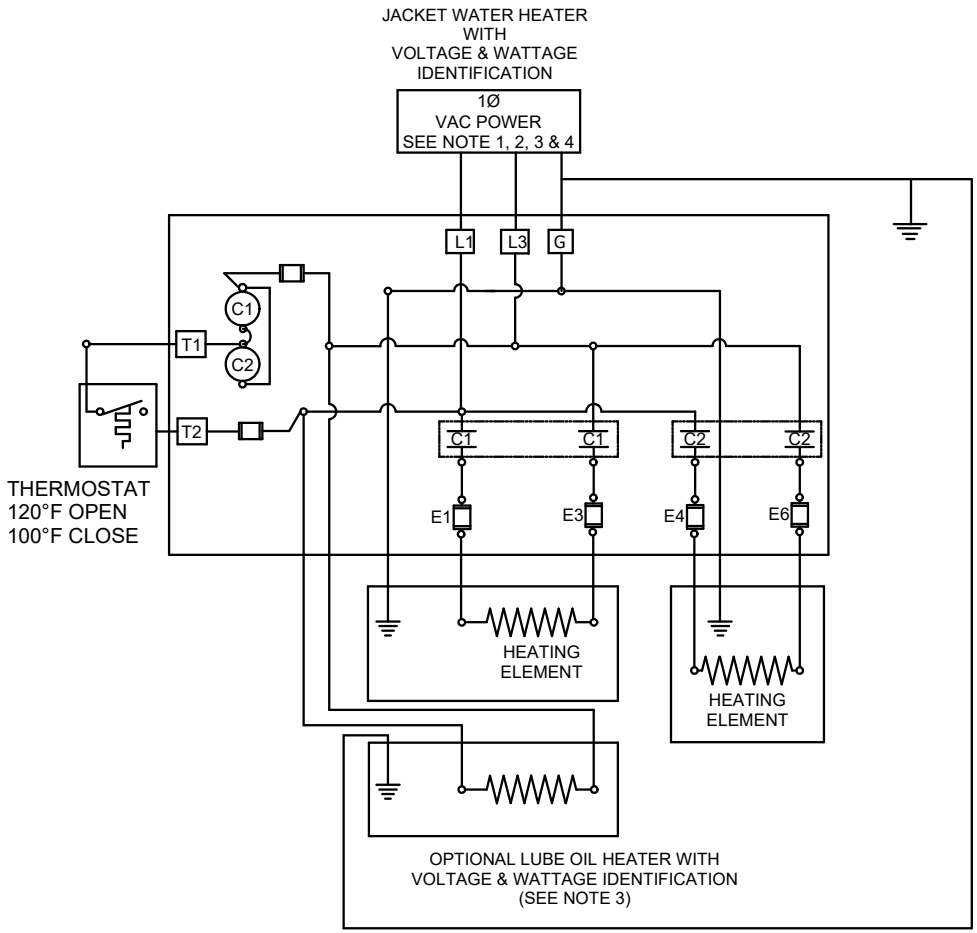

NOTES:

1. VERIFY HEATER VOLTAGE PRIOR TO CONNECTING TO POWER SOURCE, VERIFY SUPPLY CIRCUIT HAS ADEQUATE AMPERAGE FOR J.W. HEATER AND LUBE OIL HEATER WHEN PROVIDED.
2. THERE ARE TWO (2) J.W. HEATERS INSTALLED ON EACH DT2H ENGINE AND EACH IS RATED 2500 WATTS.
3. THE OPTIONAL LUBE OIL HEATER IS RATED 300 WATTS AND WILL ADD THIS ADDITIONAL WATTAGE TO THE POWER SUPPLY CIRCUIT.

HEATER SYSTEM OPERATION DATA

JACKET WATER HEATER .....STANDARD
WATTAGE (NOMINAL) .....2500 (each, qty 2)
VOLTAGE - AC, 1P .....230 (+5%, -10%)

LUBE OIL HEATER WATTAGE
REQUIRED OPTION WHEN AMBIENT IS BELOW 40° F (4° C) .....300 (qty 1)

CONTROLLED DRAWING

This is a registered part with a third party agency for use on a product. No substitutions are allowed. Consult engineering prior to and regarding any change.

THIS DRAWING AND THE INFORMATION HEREON ARE OUR PROPERTY AND MAY BE USED BY OTHERS ONLY AS AUTHORIZED BY U.S. UNPUBLISHED--ALL RIGHTS RESERVED UNDER THE COPYRIGHT LAWS

CONTROLLED DRAWING

CLARKE
Fire Protection Products, Inc.

MACHINE TOLERANCE

DECIMAL	mm	inch
X.	± 1.5	
X.X	± 0.8	± 0.06
X.XX	± 0.3	± 0.03
X.XXX	± 0.025	± 0.01
X.XXXX		± 0.001

ANGULAR: ± 0.5°

FABRICATION TOLERANCE

DECIMAL	mm	inch
X.	± 3	
X.X	± 1.5	± 0.12
X.XX		± 0.06

ANGULAR: ± 1.0°

DRWN	DPOTTER
DATE	4/1/2010
ENGR	KKUNKLER
MATERIAL	N/A
ASSEMBLY	DT2H ENGINE
NAME	WIRING DIAGRAM, J.W. HEATER - 230 VAC
PART NO.	C071613
REV	F
SCALE	NTS
UNITS	MM [INCH]
PAGE	1
OF	1